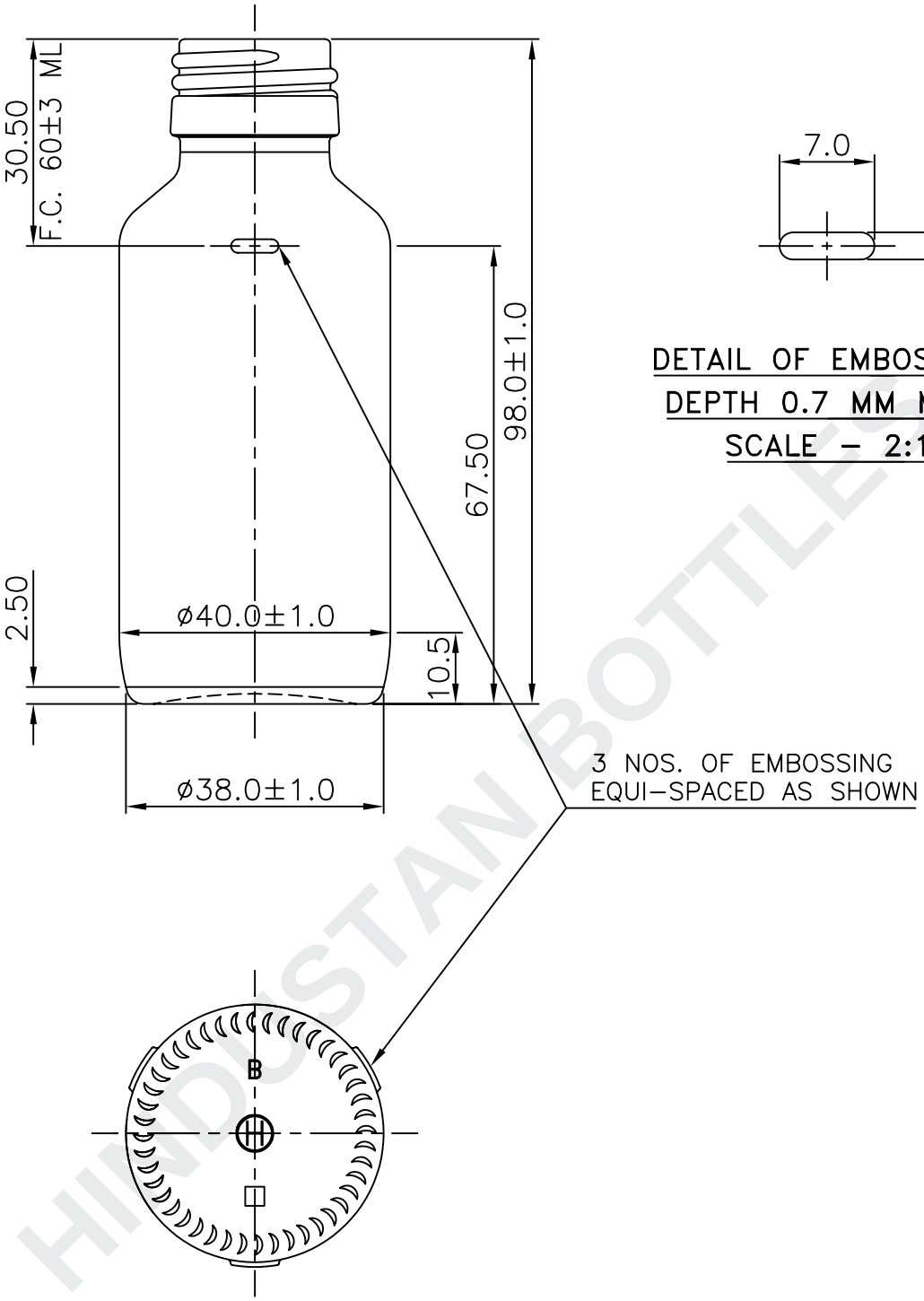

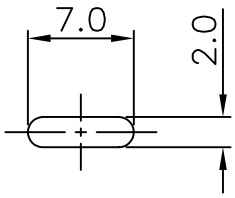

DETAIL OF EMBOSSING
DEPTH 0.7 MM MAX.
SCALE – 2:1

HINDUSTAN BOTTLES

ALL DIMENSIONS ARE IN MILLIMETERS

PROCESS	BLOW & BLOW								SPECIFICATION AGREEMENT ARE BASED ON TOLERANCED DIMENSIONS ONLY DO NOT SCALE DRAWING COPYRIGHT RESERVED. NOT TO BE COPIED IN WHOLE OR PART WITHOUT WRITTEN PERMISSION FROM H.N.G. LTD.
MINIMUM THROUGH BORE	ø13.0								
FILL POINT VERIFIED	NO								HINDUSTHAN NATIONAL GLASS & IND. LTD.
TILT ANGLE	–		No.	REV.No.	REVISION	DATE	CHK	DRC	
MAXIMUM DEPTH OF STANDARD ENGRAVING	–	FILL-POINT			-- ml ± – ml				TITLE : 60 ML CADILA ROUND BOTTLE
MAX. GAS VOLUMES	–	BRIMFUL CAP.			70.0 ML ± 3.0 ML				CUST : M/S — CHECKED:
REF DRG No : W/A/R/508		WEIGHT			76.0 GMS APPROX.				DRAWN: ANIL 17.02.04 — APPROVED:
MOULD EQUIPMENT ORDERED BY		FINISH			25 MM R.S.P.P. STD.	COLOUR	FLINT		SCALE 1:1 — DRAWING No. 40508 — A4 REV.
PLANT	B	SURFACE TREATMENT			NO	C.C. NO. 40508			